BESCO
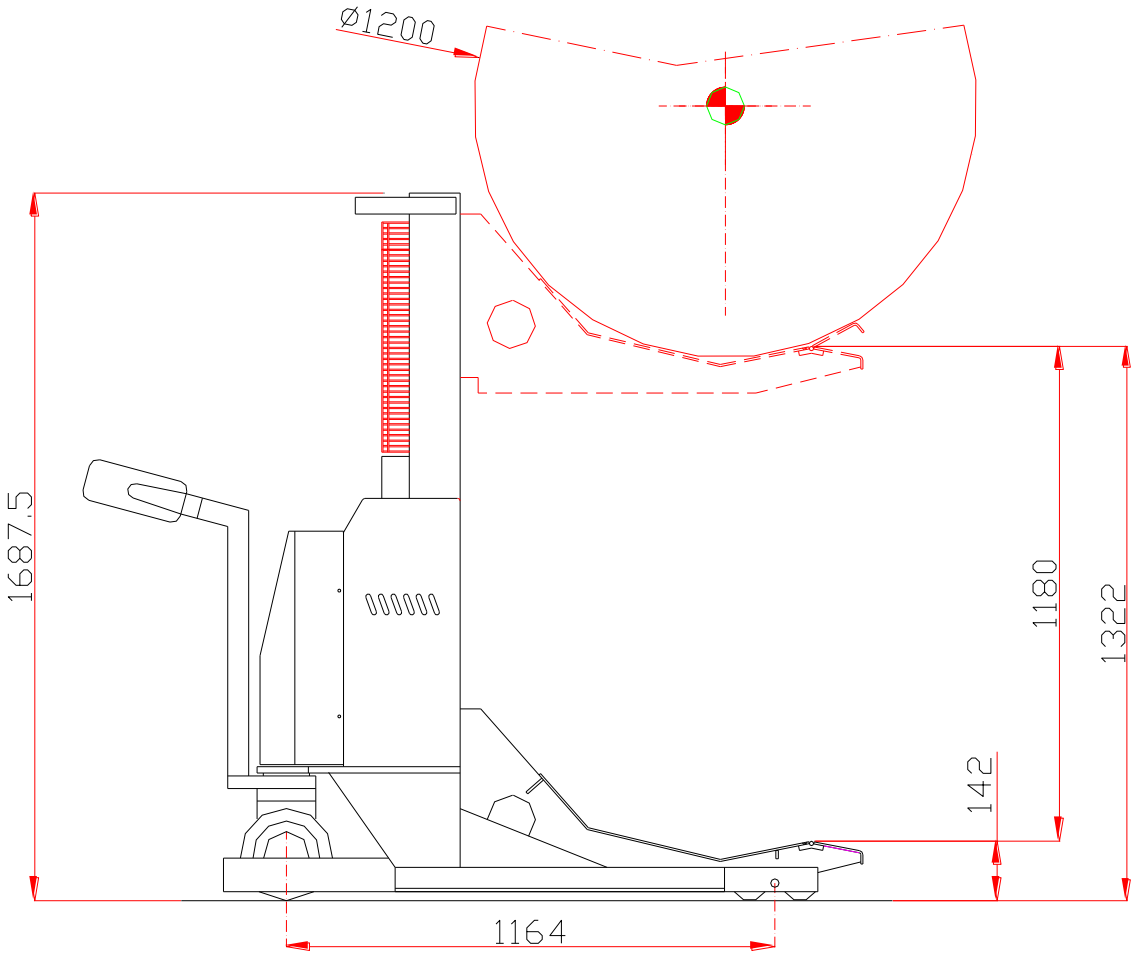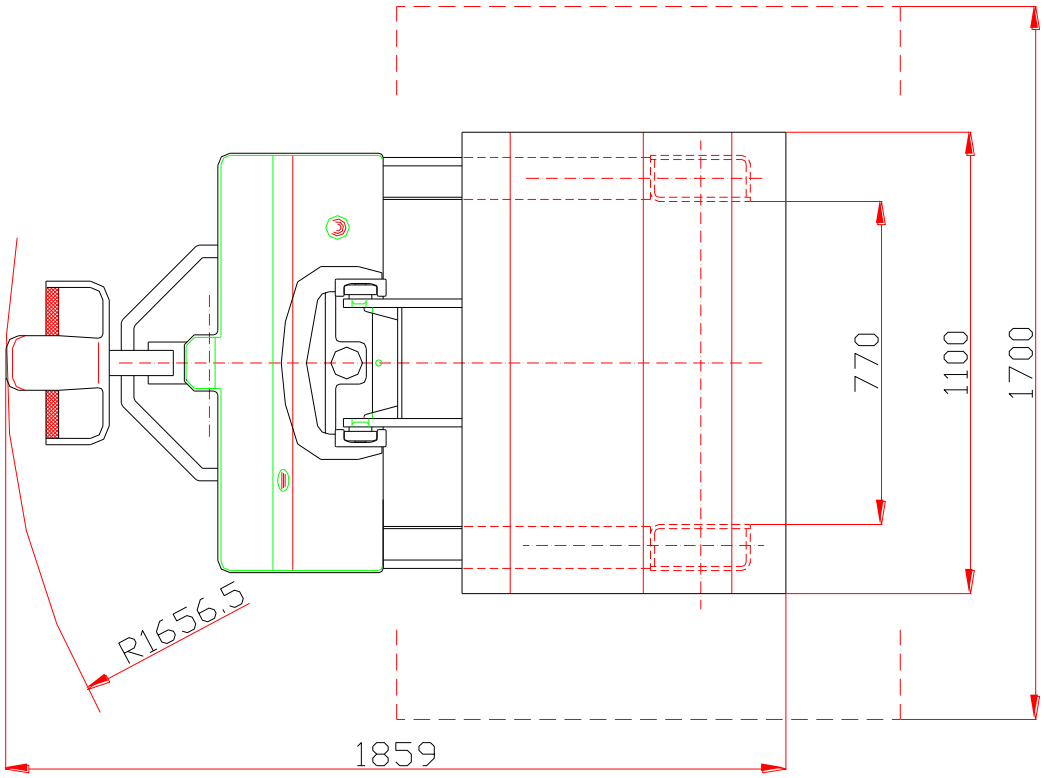
CBE-1500 SB
H = 1300